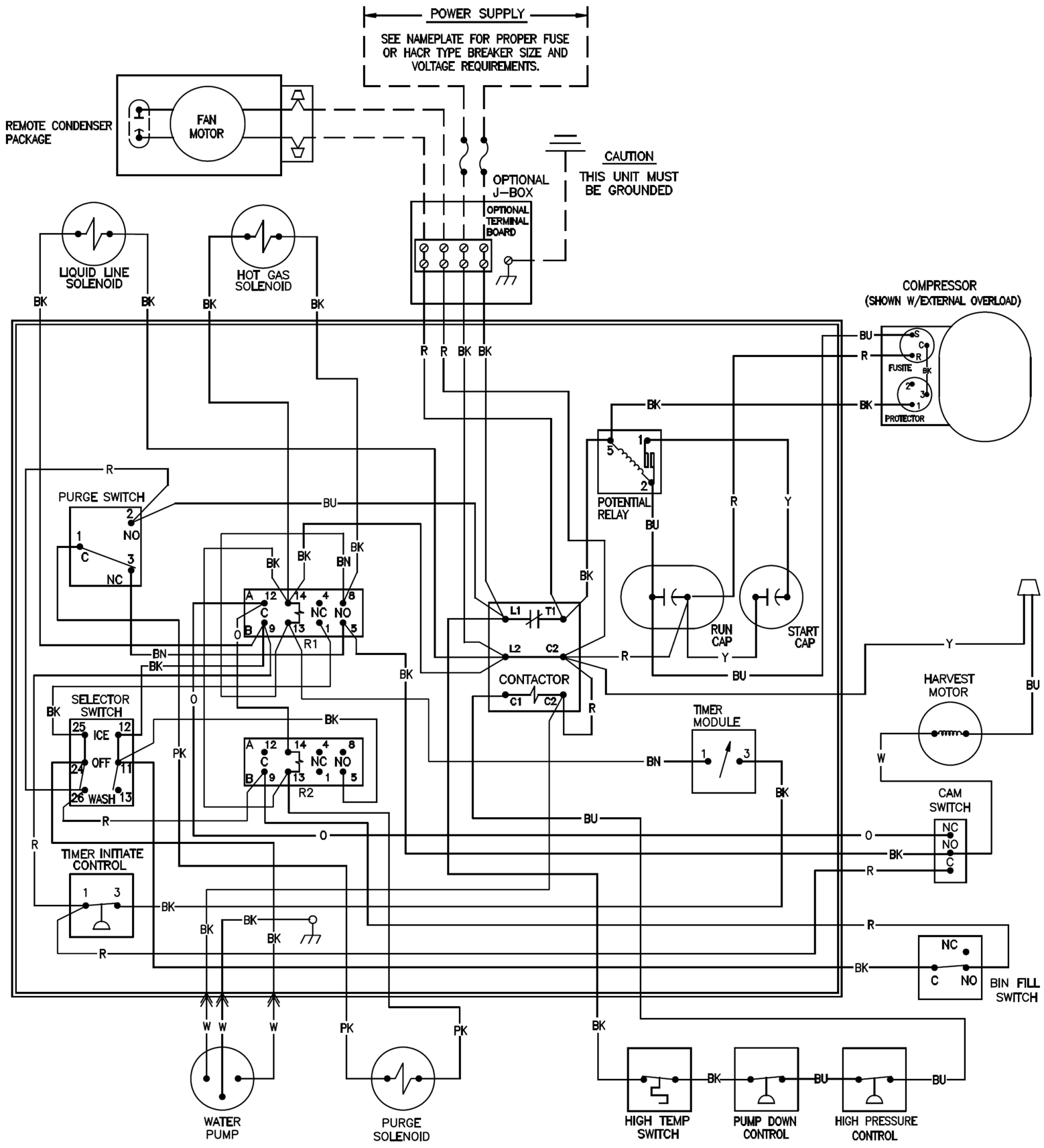

WIRING SCHEMATIC
REMOTE
(SHOWN IN TIMED PORTION FREEZE CYCLE)

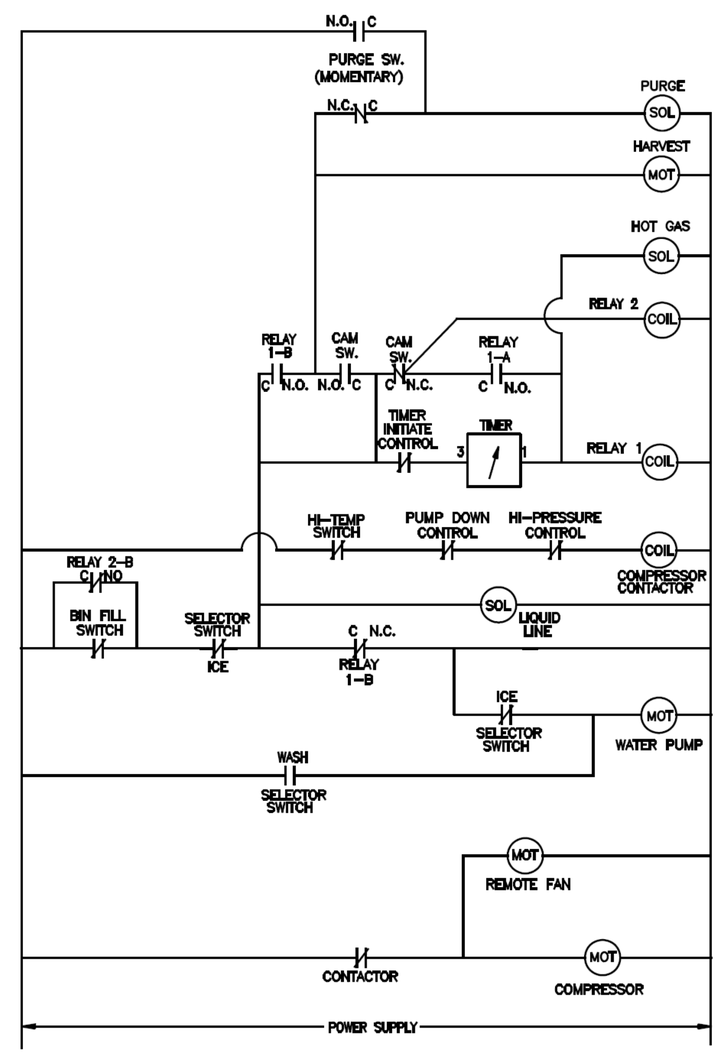

9072146-01
REV A