EMF2305L

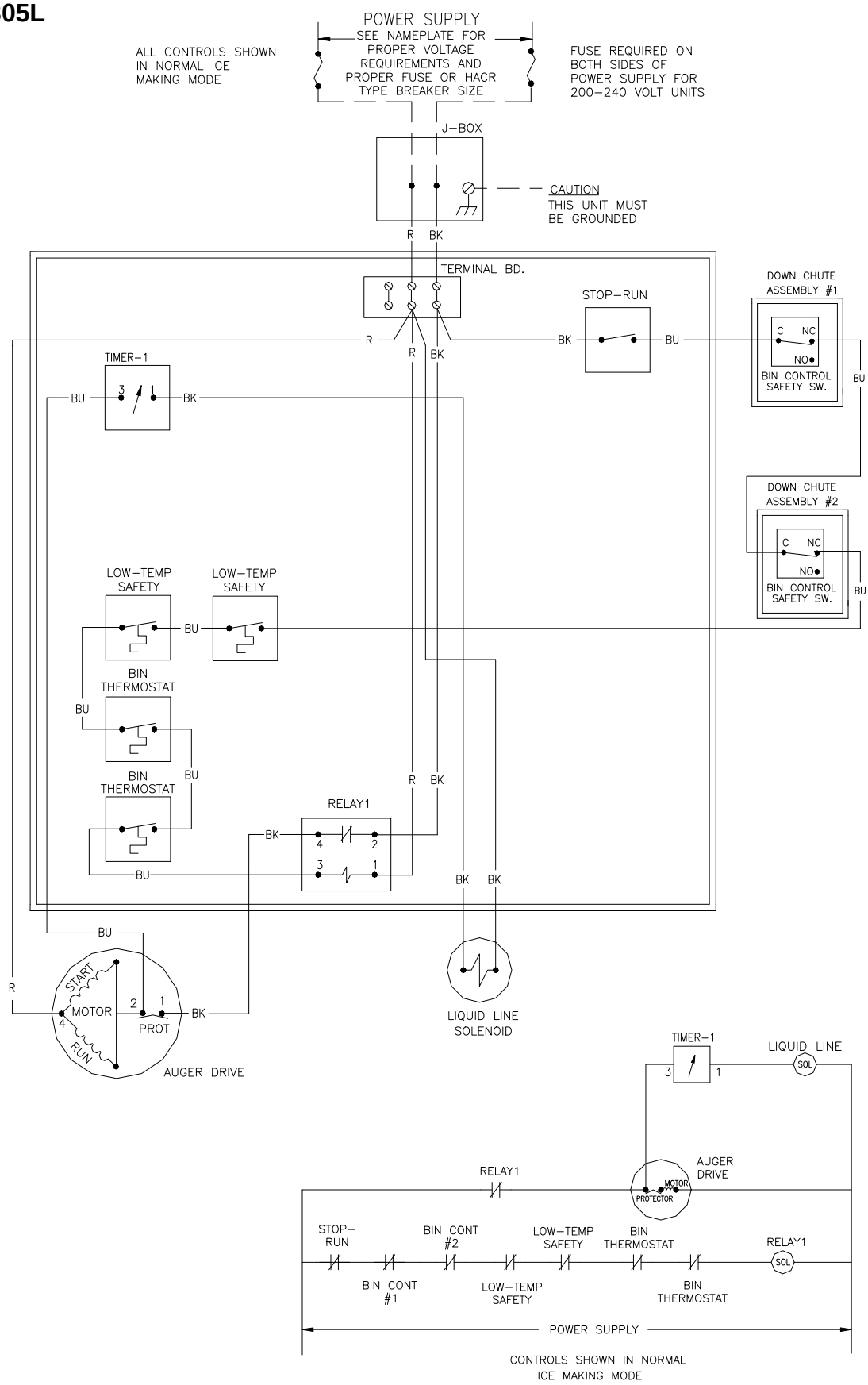

9071959-01