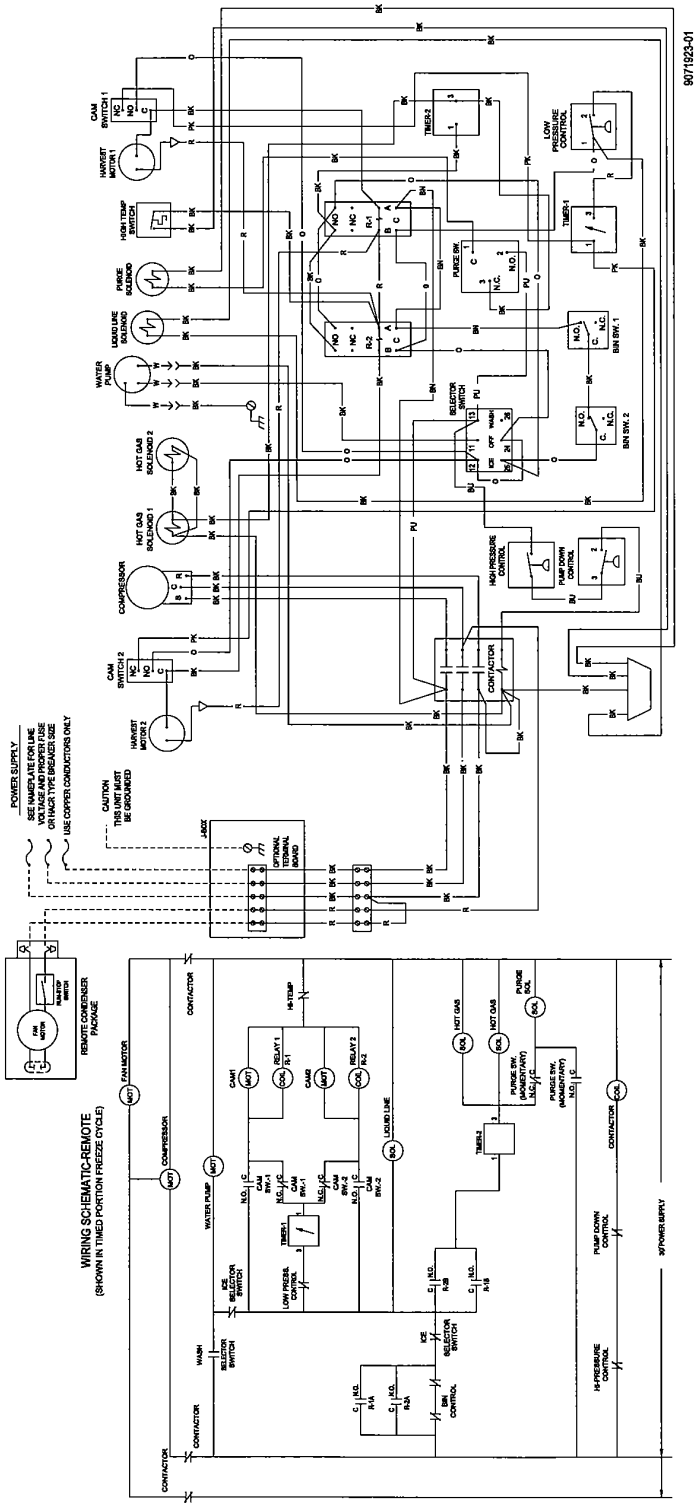EC1407/1807 Remote B2