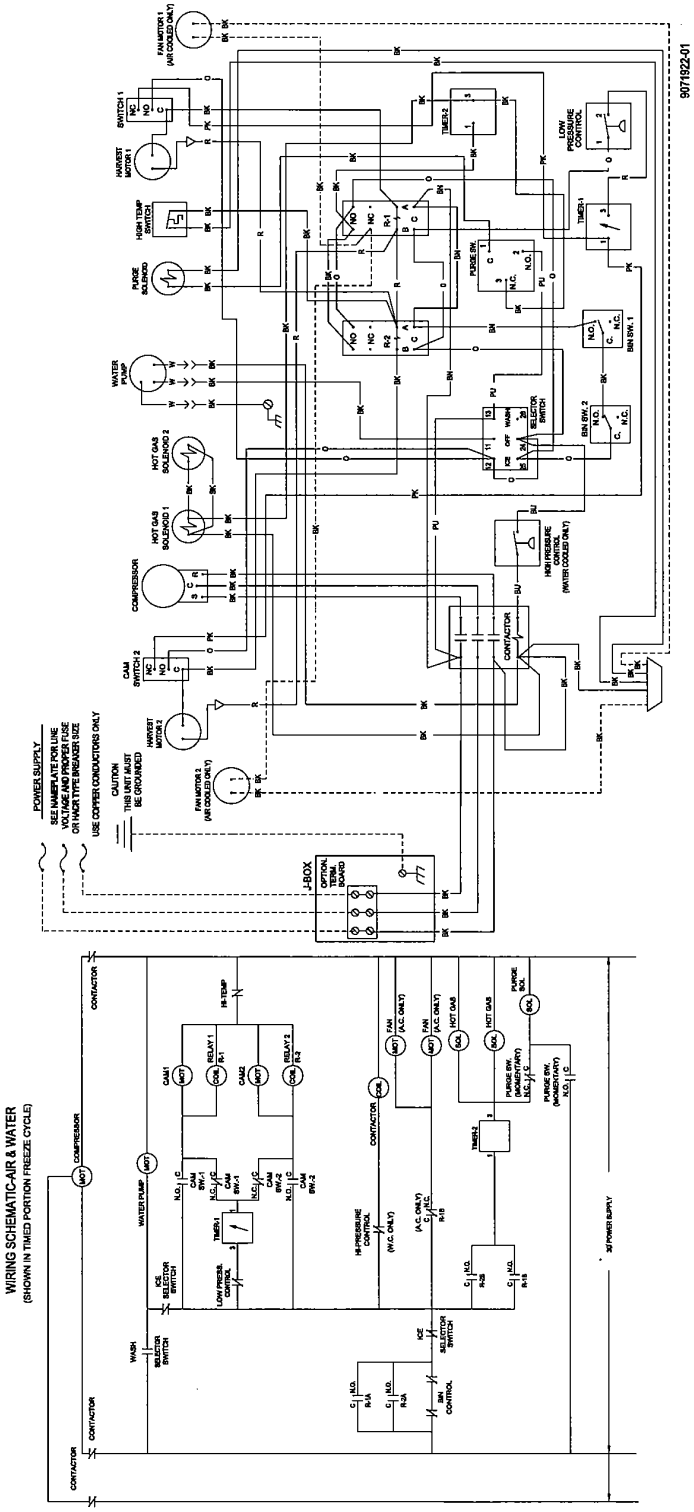EC1407/1807 Air and Water B2