C40 Remote

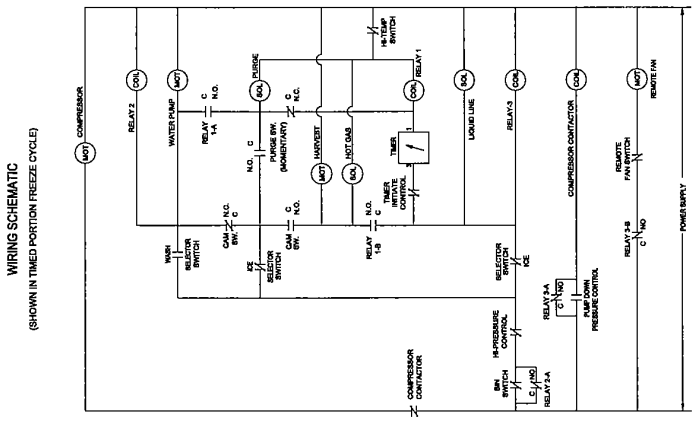
WIRING SCHEMATIC
(SHOWN IN TIMED PORTION FREEZE CYCLE)
COMPRESSOR
RELAY 2
WATER PUMP
RELAY 1-A
PURGE
PURGE SW. (MOMENTARY)
HARVEST
HOT GAS
TIMER
TIMER INITIATE CONTROL
HI-TEMP SWITCH
RELAY 1
LIQUID LINE
RELAY 3
COMPRESSOR CONTACTOR
REMOTE FAN SWITCH
REMOTE FAN
POWER SUPPLY
WASH SELECTOR SWITCH
ICE SELECTOR SWITCH
CAM SW.
RELAY 1-B
SELECTOR SWITCH
ICE
HI-PRESSURE CONTROL
BIN SWITCH
RELAY 3-A
PUMP DOWN PRESSURE CONTROL
RELAY 3-B
COMPRESSOR CONTACTOR

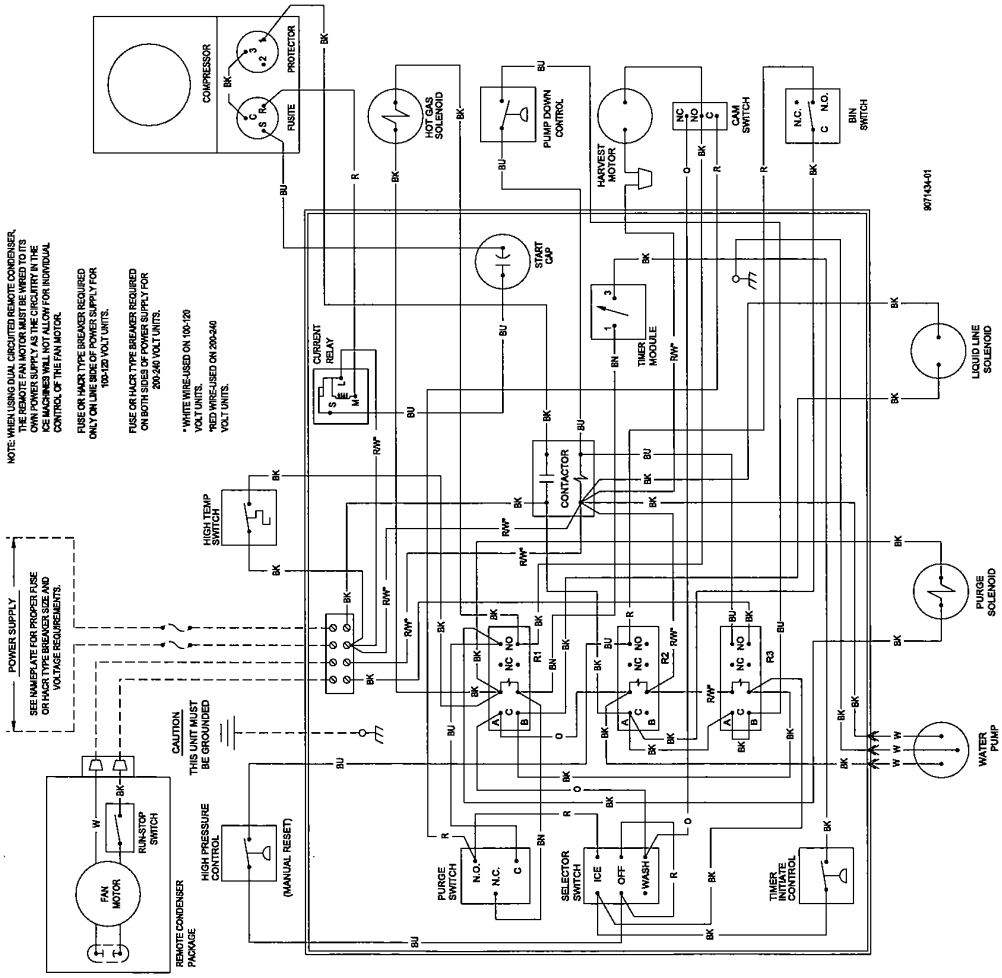
NOTE: WHEN USING DUAL CIRCUITED REMOTE CONDENSER, THE REMOTE FAN MOTOR MUST BE WIRED TO ITS OWN POWER SUPPLY AS THE CIRCUITRY IN THE ICE MACHINES WILL NOT ALLOW FOR INDIVIDUAL CONTROL OF THE FAN MOTOR.
FUSE OR HACR TYPE BREAKER REQUIRED ONLY ON LINE SIDE OF POWER SUPPLY FOR 100-120 VOLT UNITS.
FUSE OR HACR TYPE BREAKER REQUIRED ON BOTH SIDES OF POWER SUPPLY FOR 200-240 VOLT UNITS.
*WHITE WIRE-USED ON 100-120 VOLT UNITS.
*RED WIRE-USED ON 200-240 VOLT UNITS.
POWER SUPPLY
SEE NAMEPLATE FOR PROPER FUSE OR HACR TYPE BREAKER SIZE AND VOLTAGE REQUIREMENTS.
CAUTION
THIS UNIT MUST BE GROUNDED
FAN MOTOR
RUN-STOP SWITCH
REMOTE CONDENSER PACKAGE
HIGH PRESSURE CONTROL
(MANUAL RESET)
HIGH TEMP SWITCH
CURRENT RELAY
COMPRESSOR
PROTECTOR
FUSE
HOT GAS SOLENOID
PUMP DOWN CONTROL
HARVEST MOTOR
CAM SWITCH
BIN SWITCH
START CAP
TIMER MODULE
CONTACTOR
PURGE SWITCH
SELECTOR SWITCH
ICE
OFF
WASH
TIMER INITIATE CONTROL
LIQUID LINE SOLENOID
PURGE SOLENOID
WATER PUMP
R1
R2
R3
9071434-01