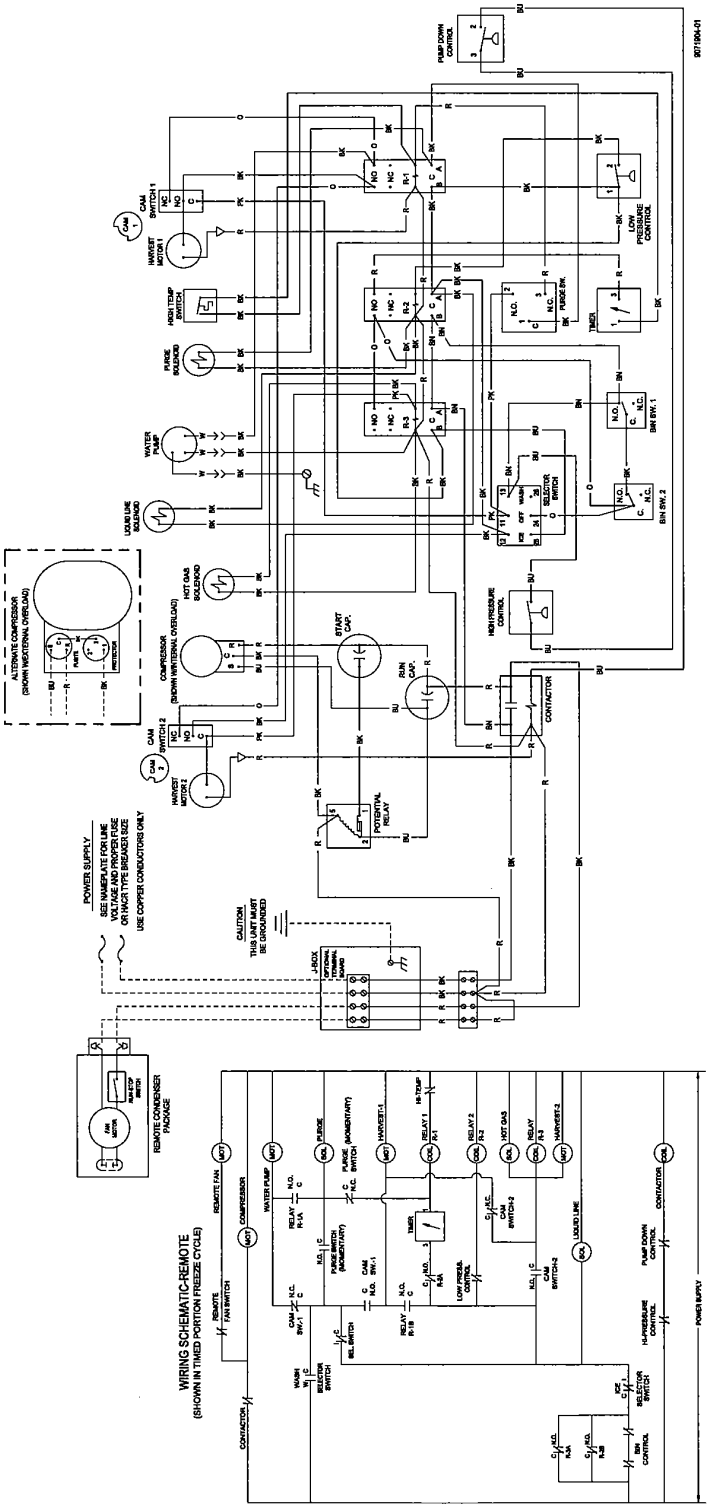EC1405/1406/1805/1806 Remote B1