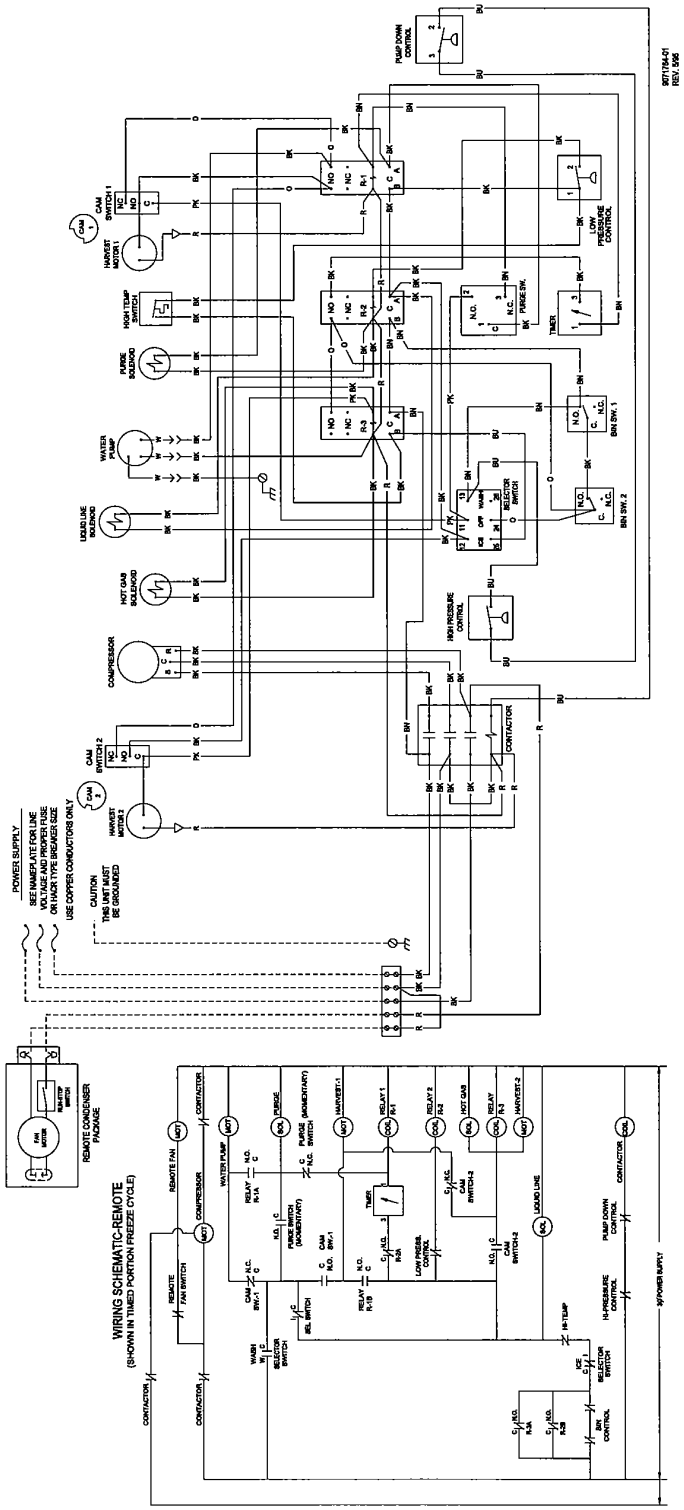C137/187 Remote