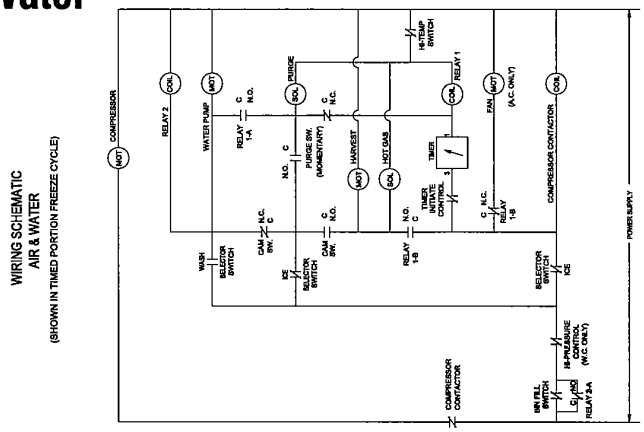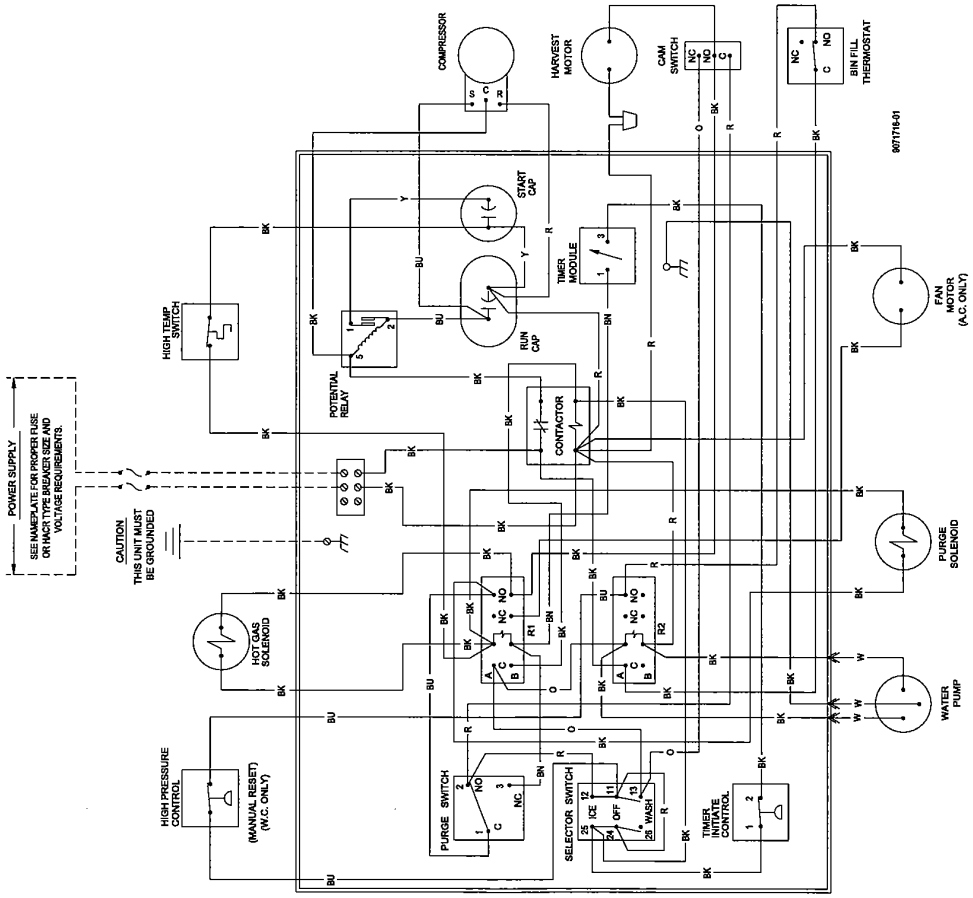C65/66/105/106 Air and Water